Product number: IN-2534

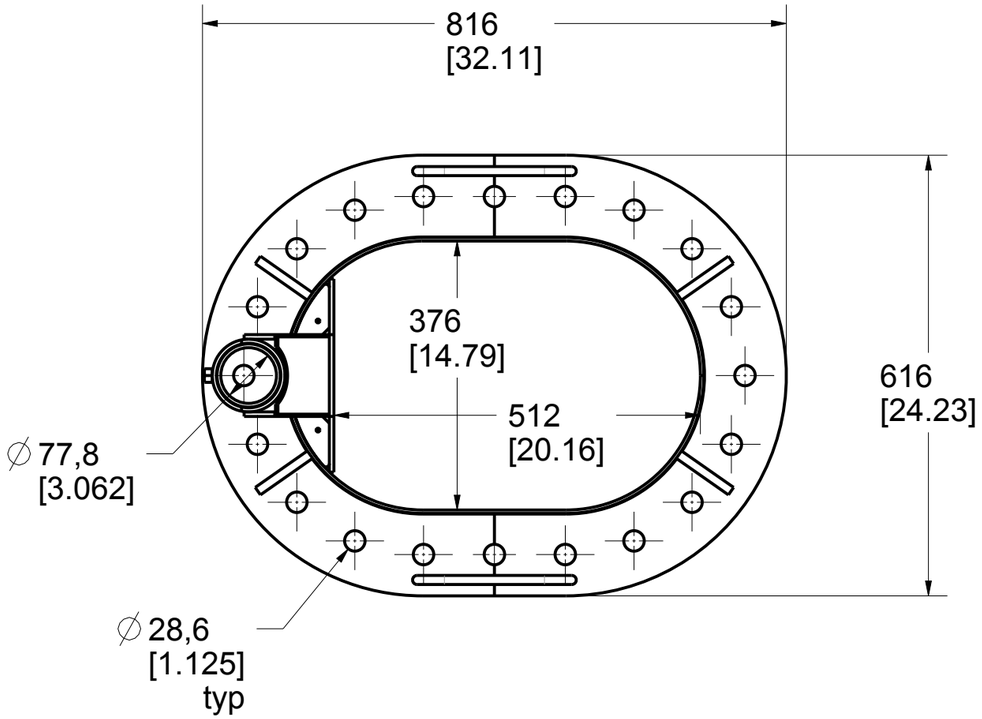

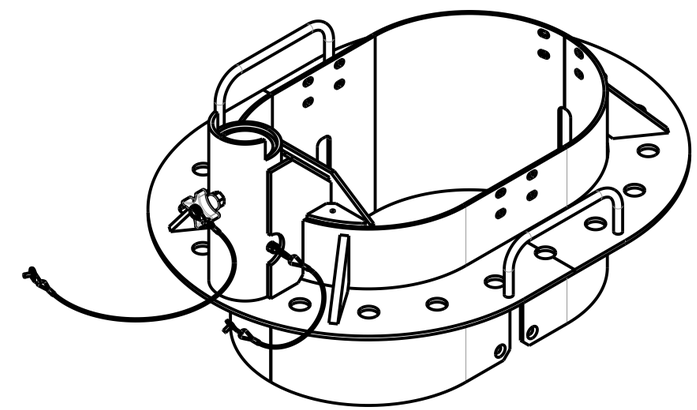

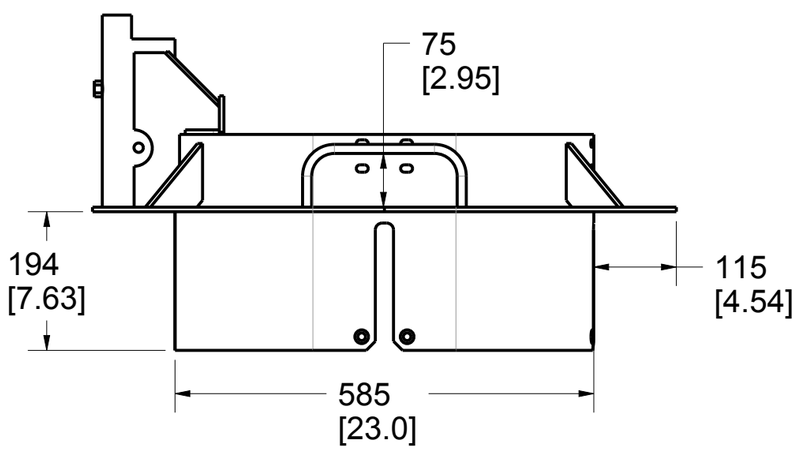

Manhole Diameter
Acceptable Tolerance
597 (23.50) min.
648 (25.50) max.

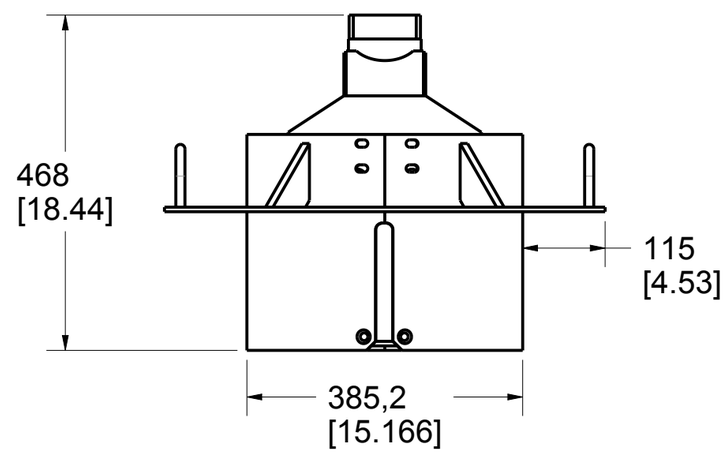

Manhole Diameter
Acceptable Tolerance
397 (15.625) min.
448 (17.625) max.

PAT.NO.:

INGÉNIEUR · ENGINEER
Michael Parker
2023-02-23
102051
QUÉBEC

PRODUITS DE SERVICE PUBLICS INNOVA INC.
INNOVA PUBLIC UTILITY PRODUCTS INC.

© 9105-0732 QUEBEC INC. and under exclusive license to INNOVA PUBLIC UTILITY PRODUCTS INC., (hereafter « INNOVA »). All rights reserved. Protected under the Copyright Act of Canada and international treaties and agreements regarding copyrights. Violators are subject to prosecution and other legal recourses for infringement. Any reproduction, adaptation or other use or disclosure whatsoever, in totality or in part, and in any form or by any means whatsoever, strictly forbidden and requires the prior written approval of INNOVA. All data is the exclusive property of 9105-0732 QUEBEC INC. and under exclusive license to INNOVA and cannot be used nor disclosed in any way either without the prior written approval of INNOVA».

WEIGHT:	TITLE:			
35.0 Lb 15.9 Kg	Rectangular Manhole Collar 400 x 600mm Rounded Corners			
COLOR:	Material:	SHEET(S):	PROJET:	Rev.
Yellow XTIRPA	Aluminum	1 / 4	IN-2534	02

Product number: IN-2534

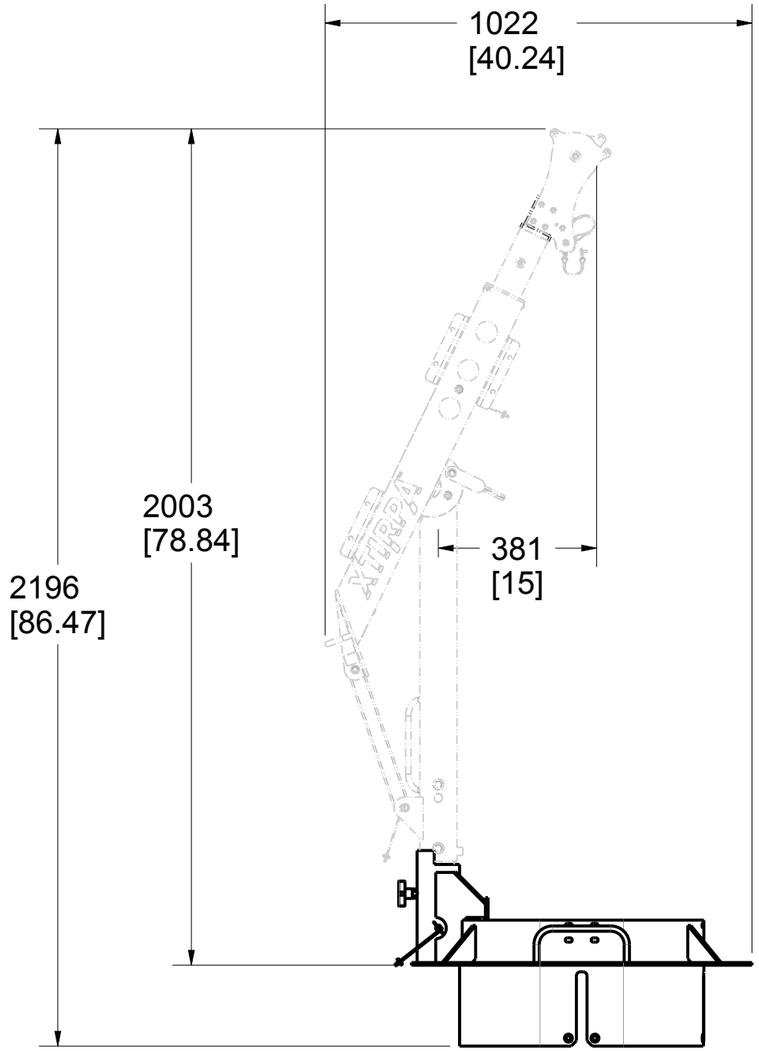

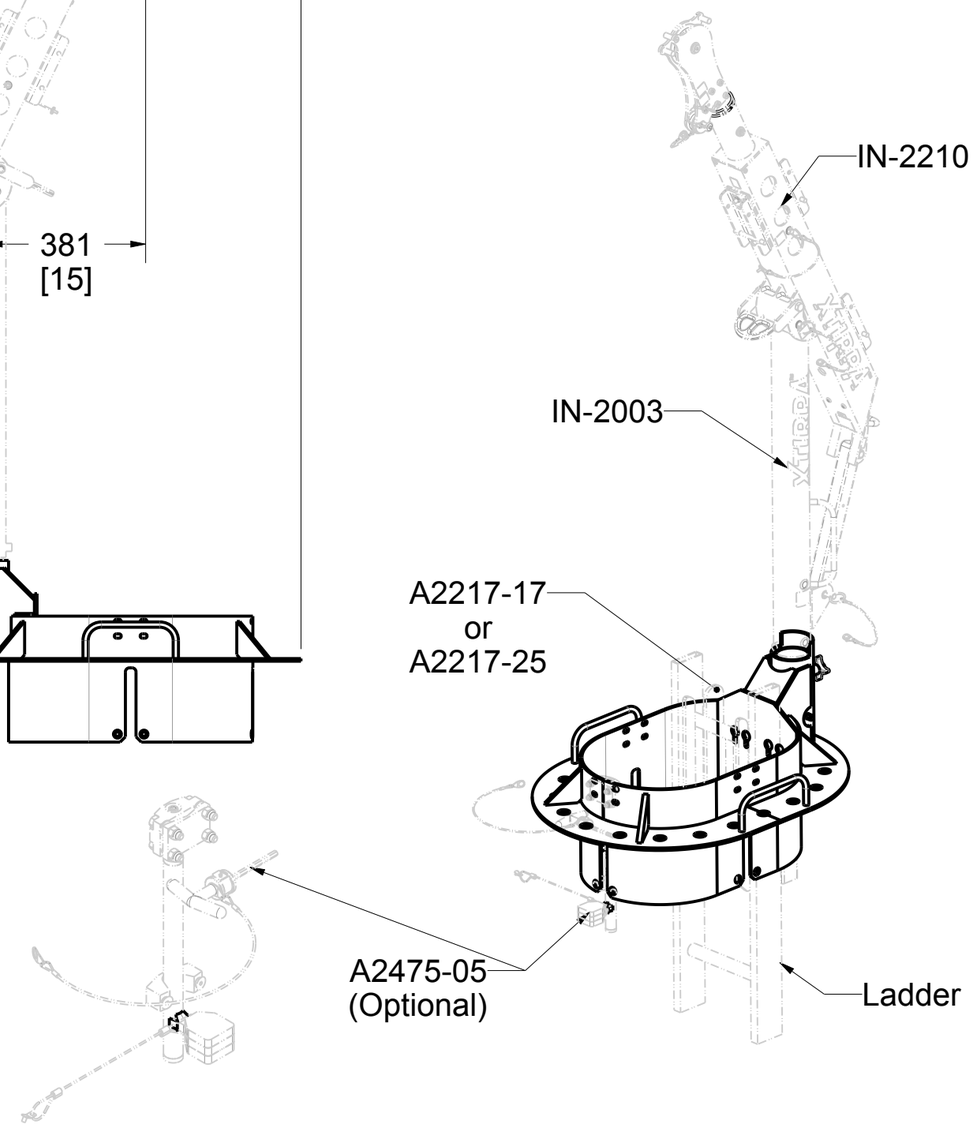

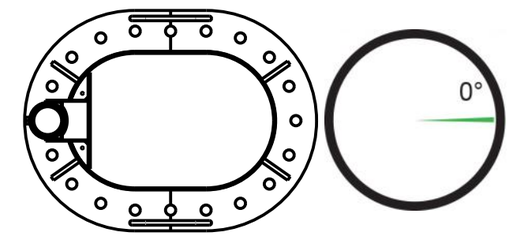

Permissible Working Angle

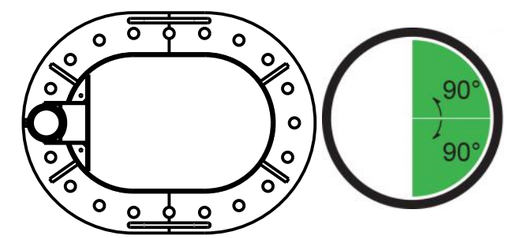

Permissible Angle of Recuperation

PAT.NO.:

INGÉNIEUR · ENGINEER
Michael Parker
2023-02-23
102051
QUÉBEC

PRODUITS DE SERVICE PUBLICS INNOVA INC.
INNOVA PUBLIC UTILITY PRODUCTS INC.

© 9105-0732 QUEBEC INC. and under exclusive license to INNOVA PUBLIC UTILITY PRODUCTS INC., (hereafter « INNOVA »). All rights reserved. Protected under the Copyright Act of Canada and international treaties and agreements regarding copyrights. Violators are subject to prosecution and other legal recourses for infringement. Any reproduction, adaptation or other use or disclosure whatsoever, in totality or in part, and in any form or by any means whatsoever, strictly forbidden and requires the prior written approval of INNOVA. All data is the exclusive property of 9105-0732 QUEBEC INC. and under exclusive license to INNOVA and cannot be used nor disclosed in any way either without the prior written approval of INNOVA».

WEIGHT:	TITLE:			
35.0 Lb 15.9 Kg	Rectangular Manhole Collar 400 x 600mm Rounded Corners			
COLOR:	Material:	SHEET(S):	PROJET:	Rev.
Yellow XTIRPA	Aluminum	2 / 4	IN-2534	02

Product number: IN-2534

SPECIFICATIONS

This equipment is considered as part of a personal fall arrest system (PFAS).

It is only to be used in conjunction with a personal fall arrest system that limits the maximum arrest force (MAF) to 6,0 kN.

Working load limit (WLL) :	164 kg	(360 lb)
Minimum breaking strength :	16,0 kN	(3 600 lbf)
Maximum working moment :	0,732 kN•m	(6 480 lbf•in)
Maximum design moment :	7,320 kN•m	(64 800 lbf•in)

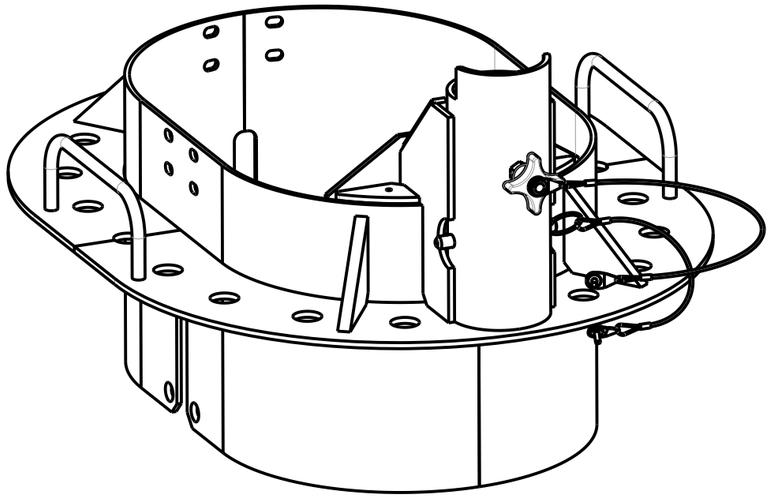

STANDARDS

Name	Classification	Year	Users
ANSI Z359.1 (R1999)		2007	1
CSA Z259.2.1		1998	1
OSHA 1910.66	App C		1
EN 795	B	2012	1
TS 16415		2013	2

MATERIAL AND CONSTRUCTION

Structure :	Aluminum 6061-T6
Hardware :	Stainless Steel
Welding certification :	Aluminum : CSA W47,2M

RESTRICTIONS

This equipment is to be used only with products approved by Innova Public Utility Products Inc.

This equipment must always be operated on a level surface.

Ensure that all hardwares and connecting pins are properly installed before use.

In the occurence of a fall or that the safety of the equipment is in doubt, the equipment must be immediately removed from service and inspected by qualified personnel before reuse.

PAT.NO.:

INGÉNIEUR · ENGINEER
Michael Parker
2023-02-23
102051
QUÉBEC

PRODUITS DE SERVICE PUBLICS INNOVA INC.
INNOVA PUBLIC UTILITY PRODUCTS INC.

© 9105-0732 QUEBEC INC. and under exclusive license to INNOVA PUBLIC UTILITY PRODUCTS INC., (hereafter « INNOVA »). All rights reserved. Protected under the Copyright Act of Canada and international treaties and agreements regarding copyrights. Violators are subject to prosecution and other legal recourses for infringement. Any reproduction, adaptation or other use or disclosure whatsoever, in totality or in part, and in any form or by any means whatsoever, strictly forbidden and requires the prior written approval of INNOVA. All data is the exclusive property of 9105-0732 QUEBEC INC. and under exclusive license to INNOVA and cannot be used nor disclosed in any way either without the prior written approval of INNOVA».

WEIGHT:
35.0 Lb
15.9 Kg

TITLE:
Rectangular Manhole Collar
400 x 600mm Rounded Corners

COLOR:	Material:	SHEET(S):	PROJET:	Rev.
Yellow XTIRPA	Aluminum	3 / 4	IN-2534	02

Product number: IN-2534

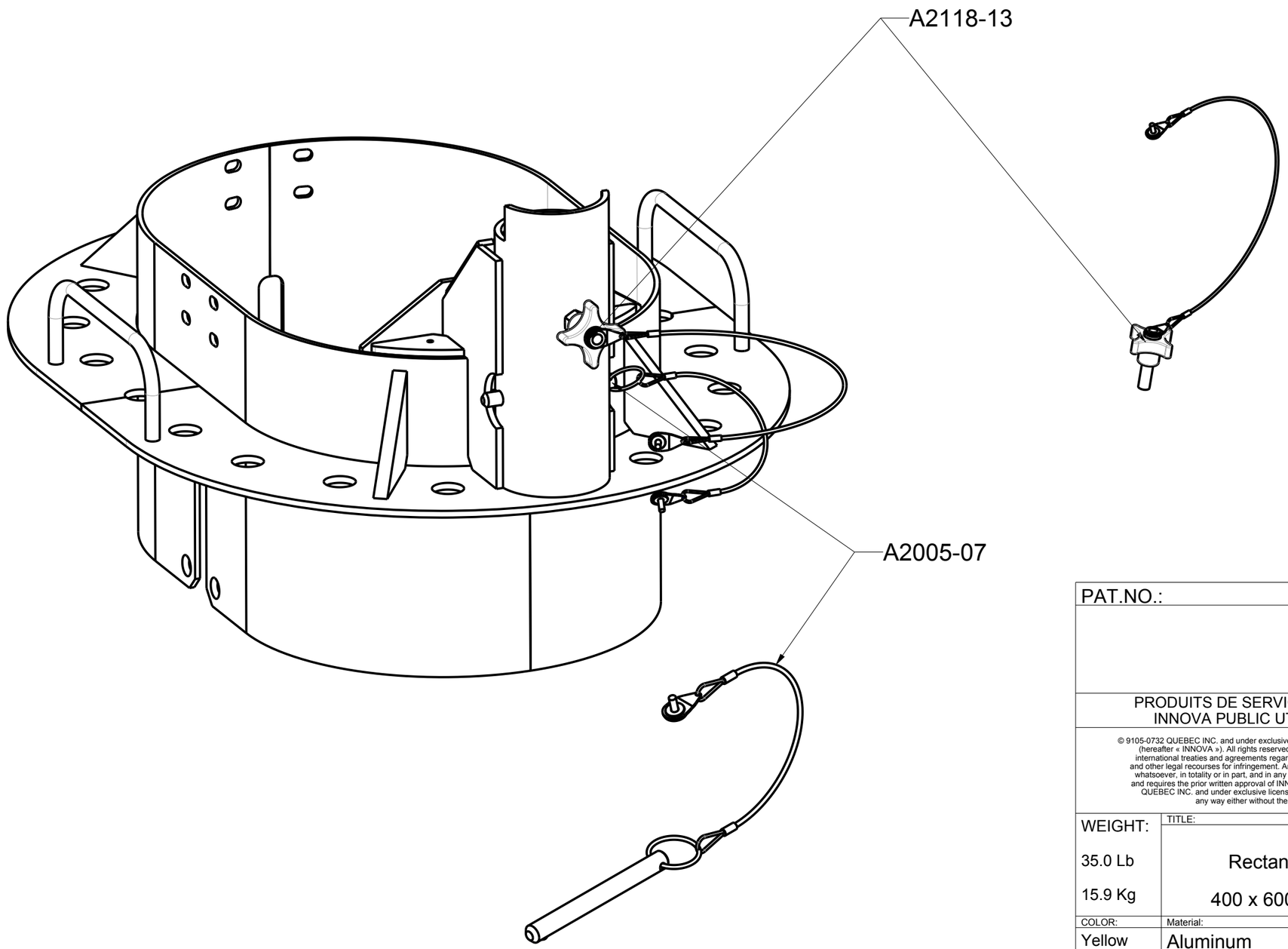

PAT.NO.:

INGÉNIEUR · ENGINEER
Michael Parker
2023-02-23
102051
QUÉBEC

PRODUITS DE SERVICE PUBLICS INNOVA INC.
INNOVA PUBLIC UTILITY PRODUCTS INC.

© 9105-0732 QUEBEC INC. and under exclusive license to INNOVA PUBLIC UTILITY PRODUCTS INC., (hereafter « INNOVA »). All rights reserved. Protected under the Copyright Act of Canada and international treaties and agreements regarding copyrights. Violators are subject to prosecution and other legal recourses for infringement. Any reproduction, adaptation or other use or disclosure whatsoever, in totality or in part, and in any form or by any means whatsoever, strictly forbidden and requires the prior written approval of INNOVA. All data is the exclusive property of 9105-0732 QUEBEC INC. and under exclusive license to INNOVA and cannot be used nor disclosed in any way either without the prior written approval of INNOVA».

WEIGHT:

35.0 Lb

15.9 Kg

TITLE:

Rectangular Manhole Collar

400 x 600mm Rounded Corners

COLOR:	Material:	SHEET(S):	PROJET:	Rev.
Yellow XTIRPA	Aluminum	4 / 4	IN-2534	02